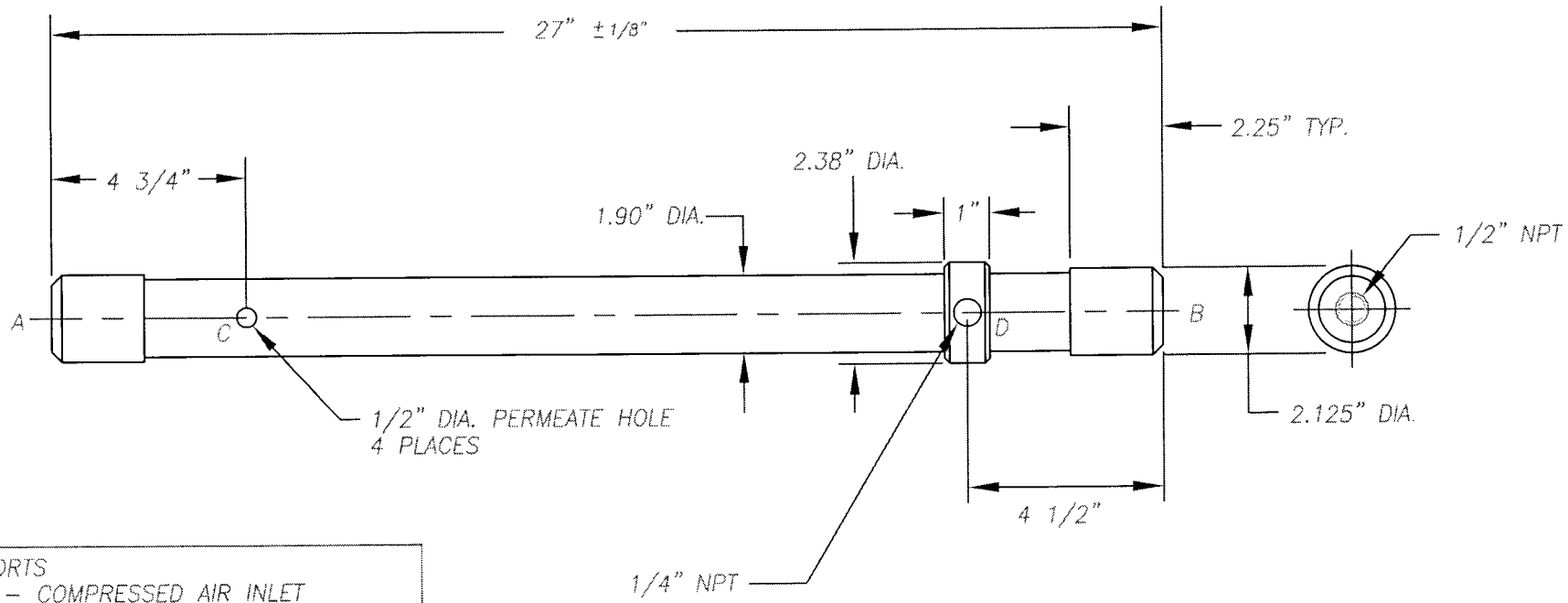

PORTS
A – COMPRESSED AIR INLET
B – NITROGEN ENRICHED PRODUCT
C – OXYGEN ENRICHED PERMEATE
D – PRODUCT SWEEP STREAM

DIMENSIONS:	2 1/8" DIAMETER X 27" LONG
CASE MATERIAL:	CPVC
END CAPS:	6061–T6 ALUMINUM
WEIGHT:	4 LBS.
MAX. OPERATING TEMPERATURE:	55°C
MAX. OPERATING PRESSURE:	200 PSIG

REV.	BY	COMMENTS	DATE	CHKD.	APPD.

This document contains confidential or proprietary information of MG GENERON. Neither the document nor the information therein is to be reproduced, distributed, used or disclosed, either in whole or part, except as specifically authorized by MG GENERON.

MG GENERON
INNOVATIVE GAS SYSTEMS
MAIN OFFICE
11985 FM 529
HOUSTON, TX 77041

210GMD MODULE

DRWN. BY: JCS	DATE: 5/02	SCALE:	SHEET No.: 1 OF 1
CHKD. BY:	DATE:		REV. 1
APPD. BY:	DATE:	DWG. No.: 210GMD–A1	